Thule EasyBase
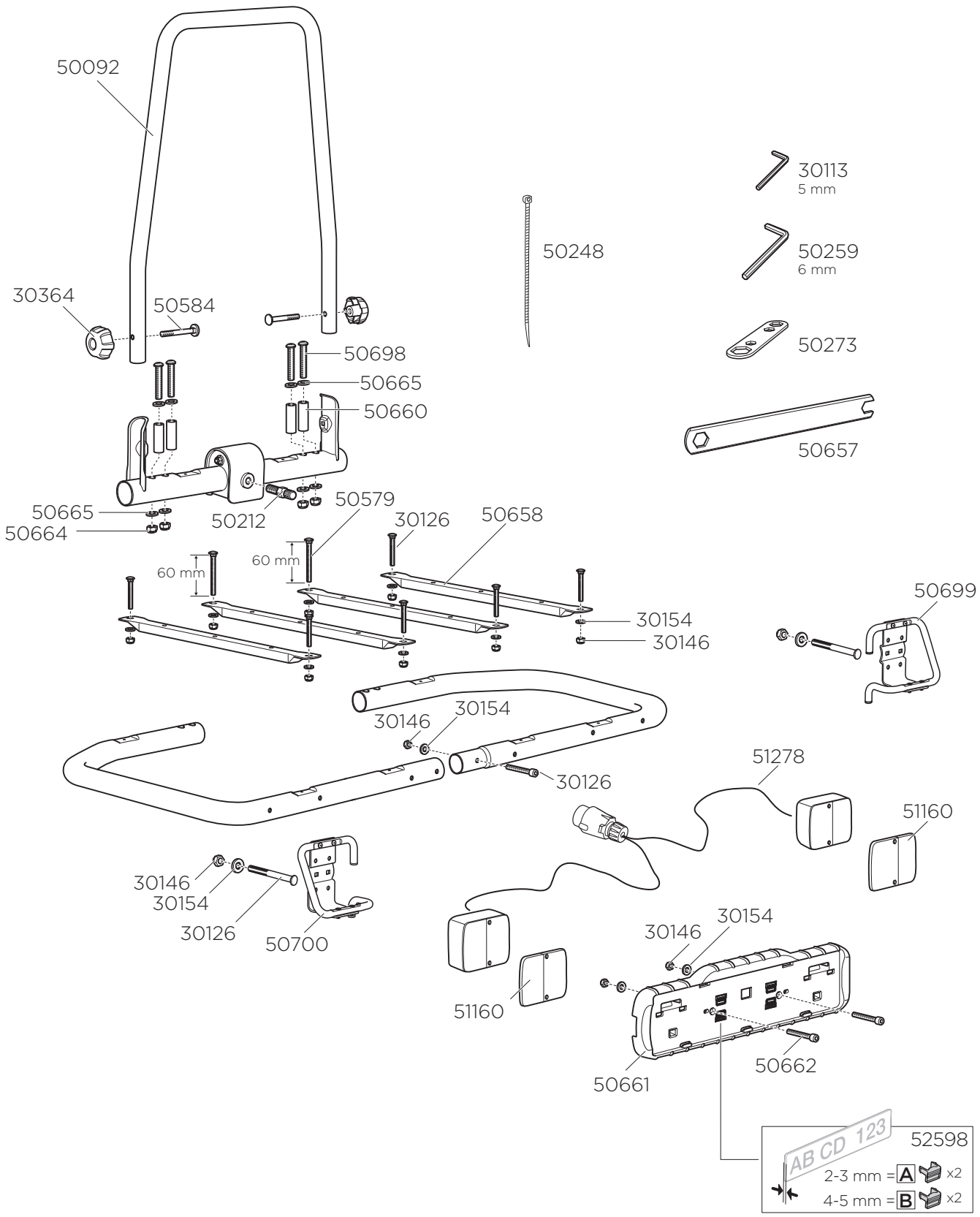
949